	AHA-103(3')	AHA-133(4')	AHA-163(5')	AHA-193(6')
W(mm)	1034	1334	1634	1934
W1(mm)	920	1220	1520	1820
W2(mm)	340	465	572	700
d(mm)	200	200	250	250

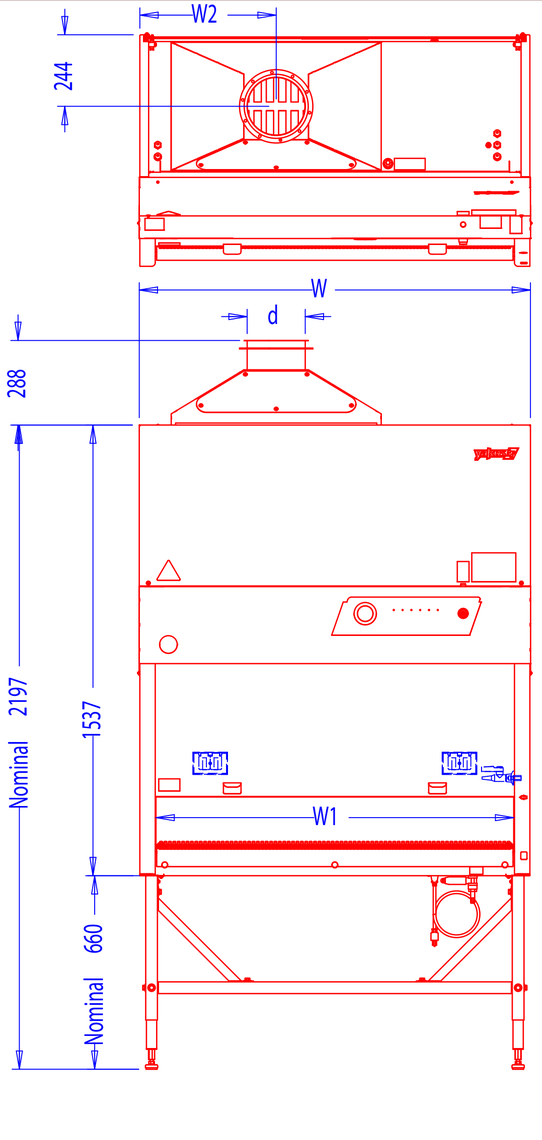

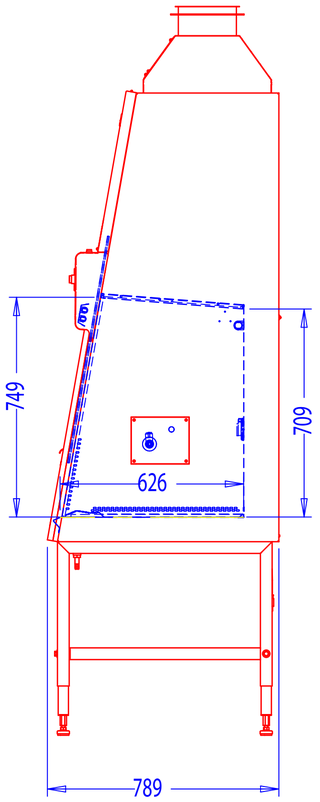

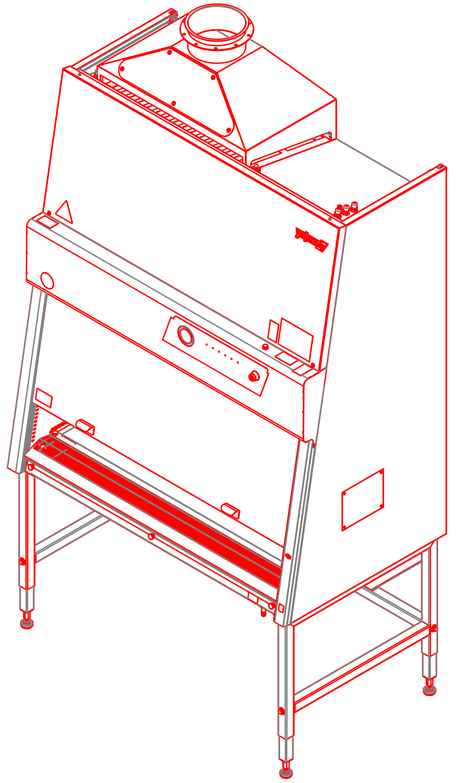

□□/□□: AHA-133-C□□□□□(□□)+□□□
Biosafety cabinet - membrane switch panel model

벎뢸: 닒/□
껆뢰:
돦□/unit:mm

CHUNG FU
□ 동 곬 □

덱□□깼	덛군 Designer	□□ Date	□□ Material	귓□ Modify	귓□□듁 Modify Date	SCALE	□□ Version	□□ Processing	맏뢰/Drawing NO.	뱦껖 Audit
□□□□□□ ā 0.5 □□□□□□ ā 0.5 □□□□□□-0+0.1 □□□□□□ ā 0.3 NCT□□□□□□□ ā 0.1	□□□	2014/8/21				1:25			A00-C 2018/6/14-SHEET 1 OF 5	

AHA-133 □□□□□(□□□□□)